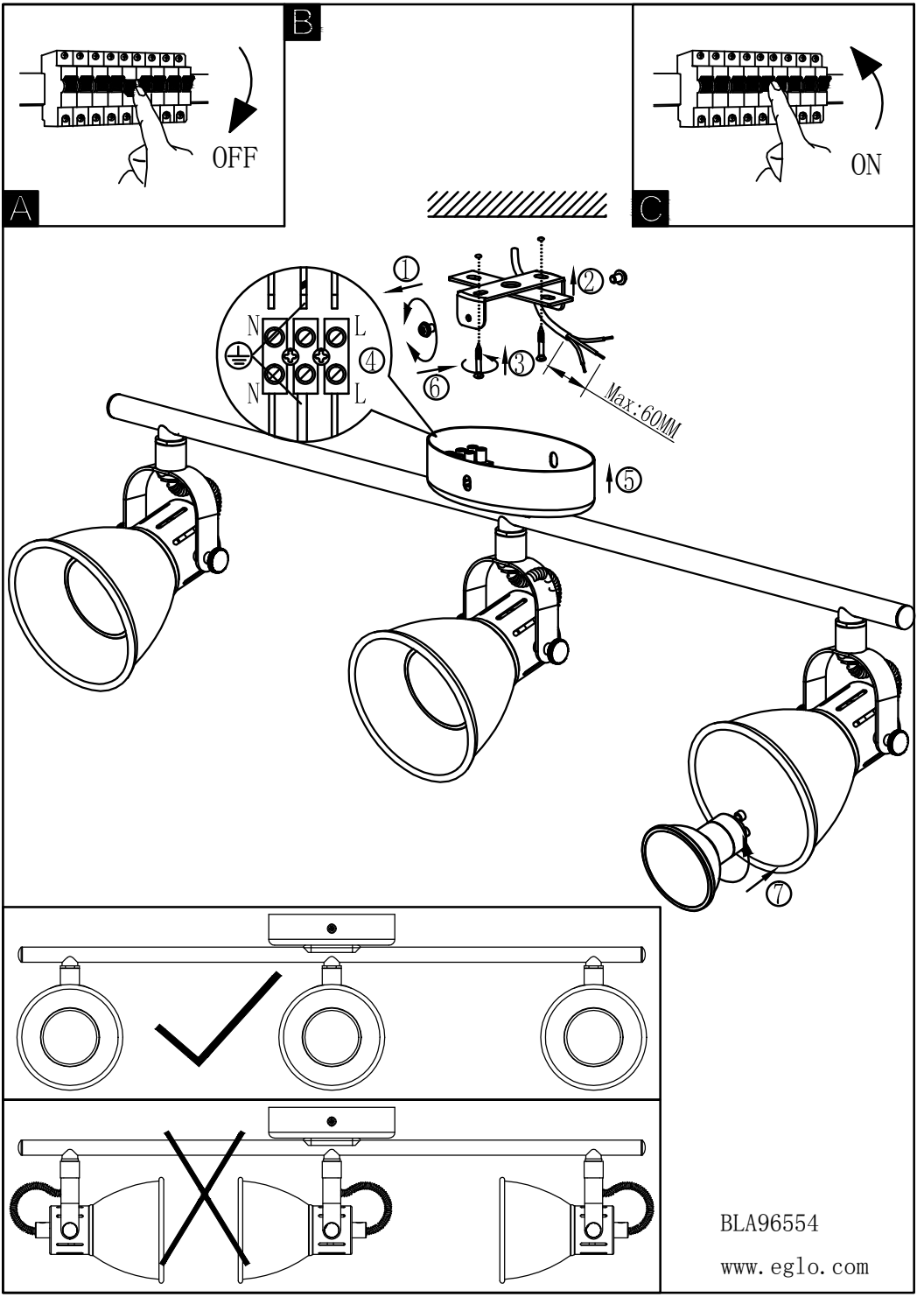
A
OFF
B
C
ON
N
L
N
L
①
②
③
④
⑤
⑥
⑦
Max:60MM
BLA96554
www.eglo.com