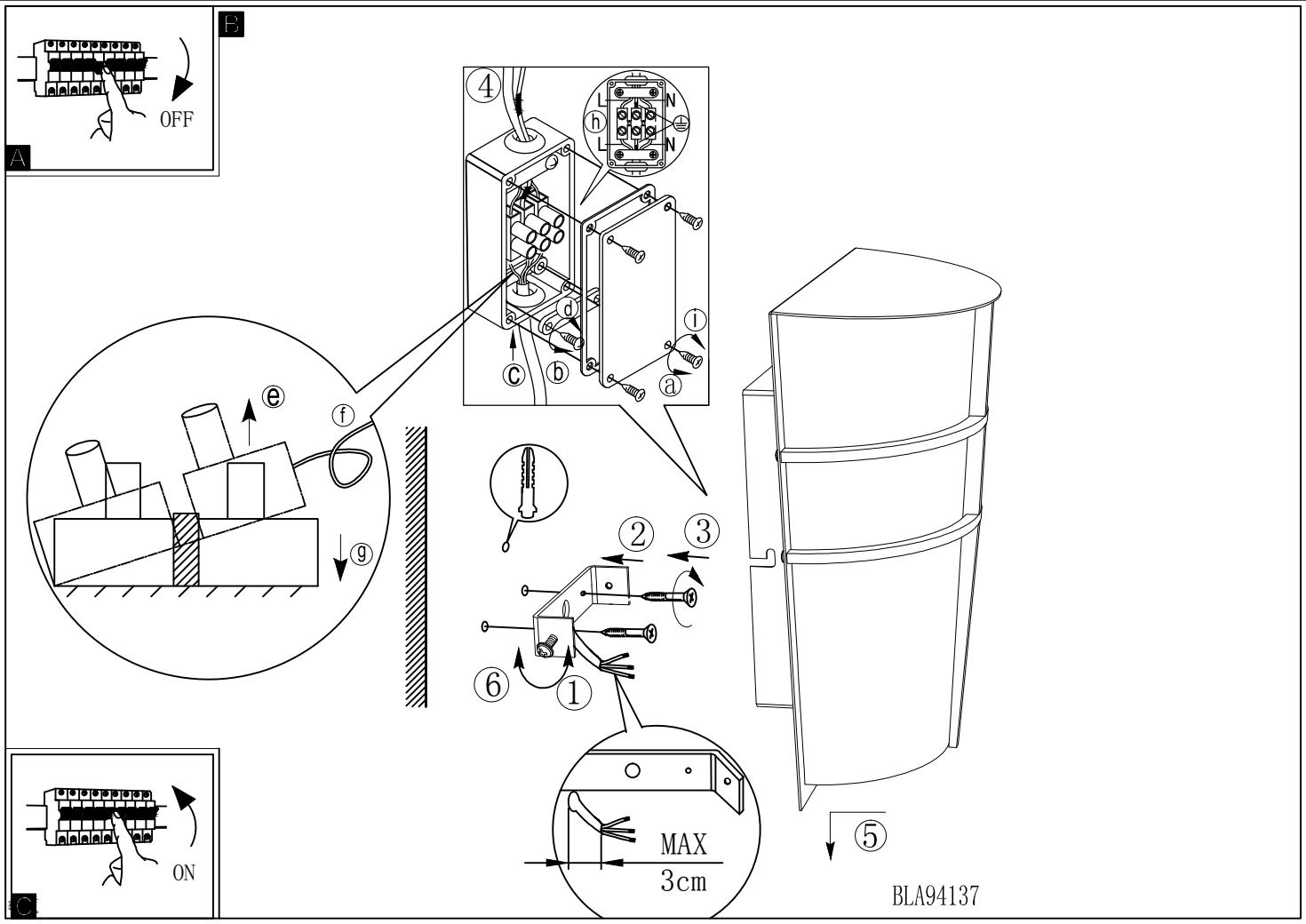
A
OFF
B
4
L
N
h
L
N
d
c
b
a
l
e
f
g
2
3
6
1
MAX
3cm
5
C
ON
BLA94137